受　控

SPECIFICATION

1. SCOPE

This specification is applied to the piezoelectric diaphrogm.

2. SPECIFICATION (at25℃)

2.1 Resonant Frequency	:	3.75~4.35 KHz
2.2 Resonant Resistance	:	250 Ω max
2.3 Capacitance	:	Cm: 20000pF± 30% at 100Hz
2.4 Input Voltage	:	30Vp-p max
2.5 Operating Temperature	:	-20~+60℃
2.6 Storage Temperature	:	-20~+70℃
2.7 Dimension	:	as per figure

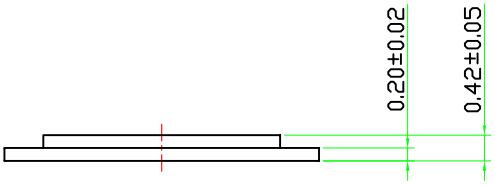

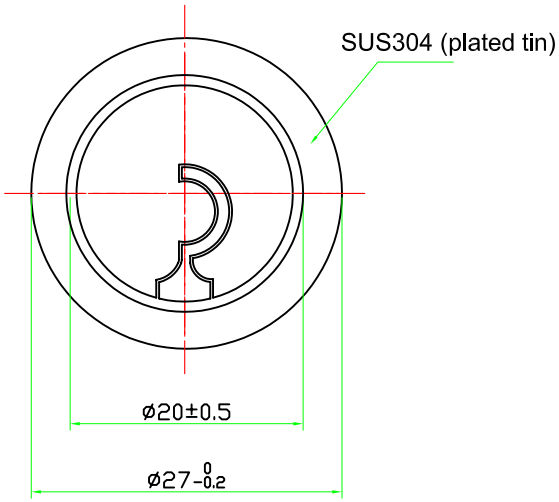

TOLERANCES UNLESS NOTED OTHERWISE .X ± .XX ± .XXX ± 90° FORMED +2° ANGLES -1°	DRAWN	汪 逸	KEPO MODEL NO.	CUSTOMER			
	DESIGN		MFT-27GX-4.15B1	CUSTOMER NO.			
	CHECKED						
	APPROVED	徐锦生	DWG NO.				
	DATE	10.01.04	KP3.844.809.01	VER	1.0	SCALE	
	CONTRACT NO.			UNIT	mm	SHEET	
FIRST ANGLE PROJECTION	AGENCY APPROVAL		KEPO CO.,LTD.	TEL:(+86)574-88370330 FAX:(+86)574-88370329			