Micro Switch

Q-947

TYPE: **MSW-22**

SPECIFICATIONS

Rating: 1A 125/250V AC
Contact R: 30mΩ max
Insulation R: 250V DC 1OOMΩ min
Dielectric Strength: 1 Minute 1500V AC
Operating Temperature: -25°C ~ +65°C
Electrical Life: 30, 000 Cycles

Outline Drawing

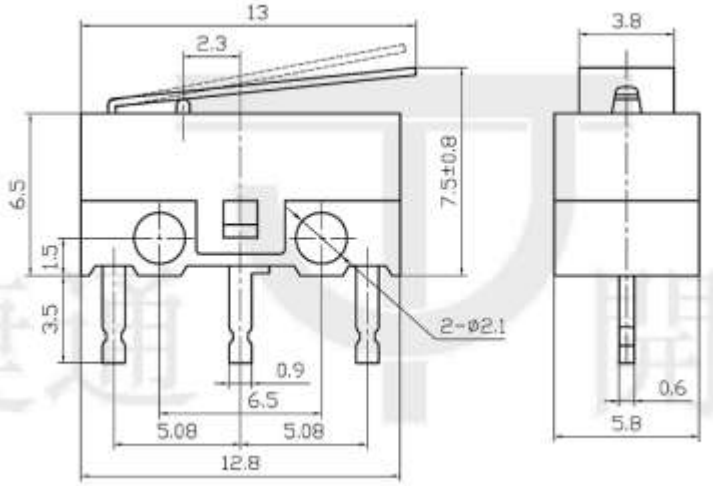

Mounting

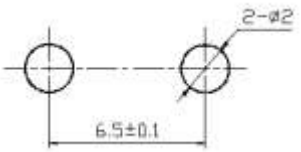
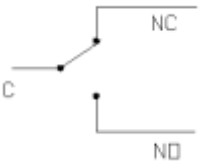
Circuitry